L351-075 (35mm) SERIES LINEAR STEPPER MOTOR DATA

GERNERAL SPECIFICATIONS

Resistance Accuracy --------- ±10%
Inductance Accuracy --------- ±20%
Operating Temp Range ------ -40℃~125℃
Storage Temp Range -------- -30℃~80℃
Insulation Resistance ------ >100Mohm Min at 500VDC
Life Time ----- 1,500,000 returns (advance 39m, backing out 39mm)
Protection Rate ---------- IP34
Lead Wire ---------- AF-200

Picture

Electrical Specification

Series Model	Rated Voltage (v)	No.of phase	Rated Current (A)	Phase Resistance (ohm)	Phase Inductance (mH)	Travel per Step Avail (mm)	The Mark Thrust (N)	The Mark Pull (N)	After All Journey (mm)	Motor Wgt (g)
L351-07555 -01	5	2	0.46	11	8.6	0.0254	55	55	>=75	86
L351-07555 -02	12	4	0.8	15	5.2	0.0254	55	55	>=75	86
L351-07055	12	4	0.8	15	5.2	0.0254	55	55	70	86

Mechanical Dimensions

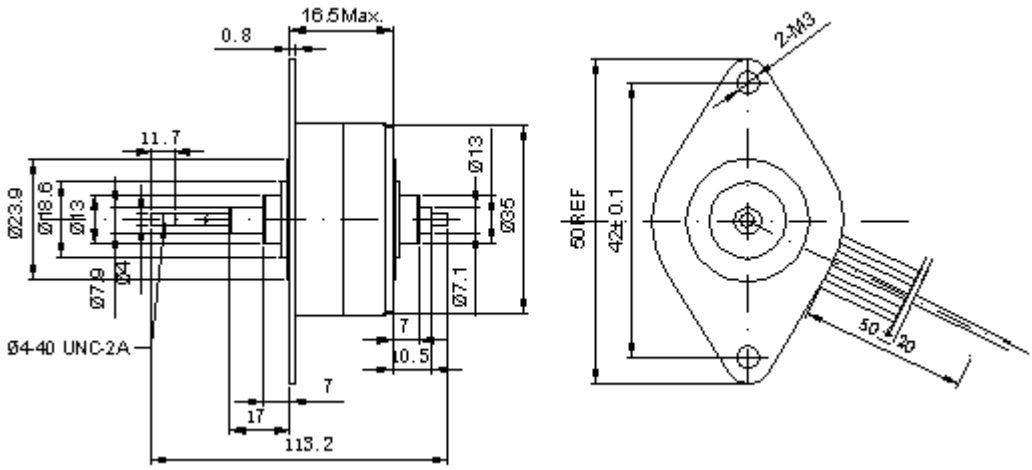

Standard Leadwire Configuration

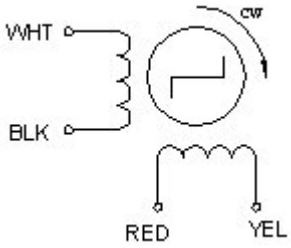

Wire Color	Step 1	2	3	4
WHT	-			-
BLK		-	-	
RED	-	-		
YEL			-	-

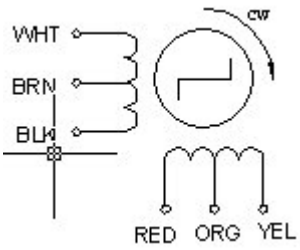

Wire Color	Step 1	2	3	4
WHT	-	-		
BRN	+	+	+	+
BLK			-	-
RED		-	-	
ORG	+	+	+	+
YEL	-			-