

Wiring Diagram

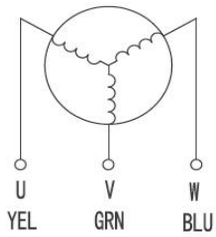

Appearance Size & Motor Installation

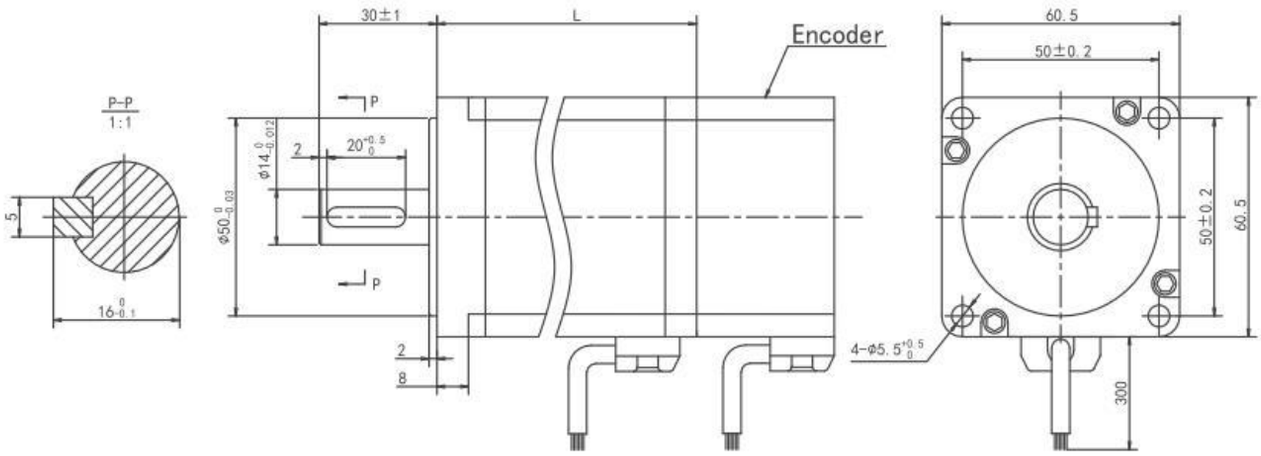

Electrical Specification

Motor Model		SS601-640A	SS601-960	SS601-1270A	SS601-640B	SS601-1270B
Number of Phase		3				
Number of Poles		8				
Rated Voltage	(VDC/VAC)	48			220	
Rated Speed	rpm	3000				
Rated Torque	N.m	0.64	0.96	1.27	0.64	1.27
Rated PowerW	W	200	300	400	200	400
Rated Current	A	5.5	8.3	11	1.45	2.9
Peak Current	A	16.5	24.9	33	4.35	8.7
Peak Torque	N.m	1.92	2.88	3.81	1.92	3.81
Rotor Inertia	kg.cm	0.25	0.35	0.45	0.25	0.45
True Cosant	N.m/A	0.11	0.11	0.11	0.44	0.44
Torque Constant	V/krpm	10.5	10.5	10.5	29	29
Line-line Resistance	ohm	0.2	0.3	0.4	10	2.2
Line-line Inductance	mH	0.4	0.5	0.6	11	5.5
Length	mm	69	81.5	96	69	96
Weight	kg	0.6	1	1.4	0.6	1.4
Encoder Resolution	P/R	1000,1024,2500/17bit,23bit				
*Note: We can manufacture products according to customer’ s requirements.						

* Note: We can manufacture products according to customer's requirements.
Optional accessory is the encoder and brake to match this product.

* Contact sales@ichmo.com.